kurtz ersa

PRESS FIT Systems

GLOBAL. AHEAD. SUSTAINABLE.

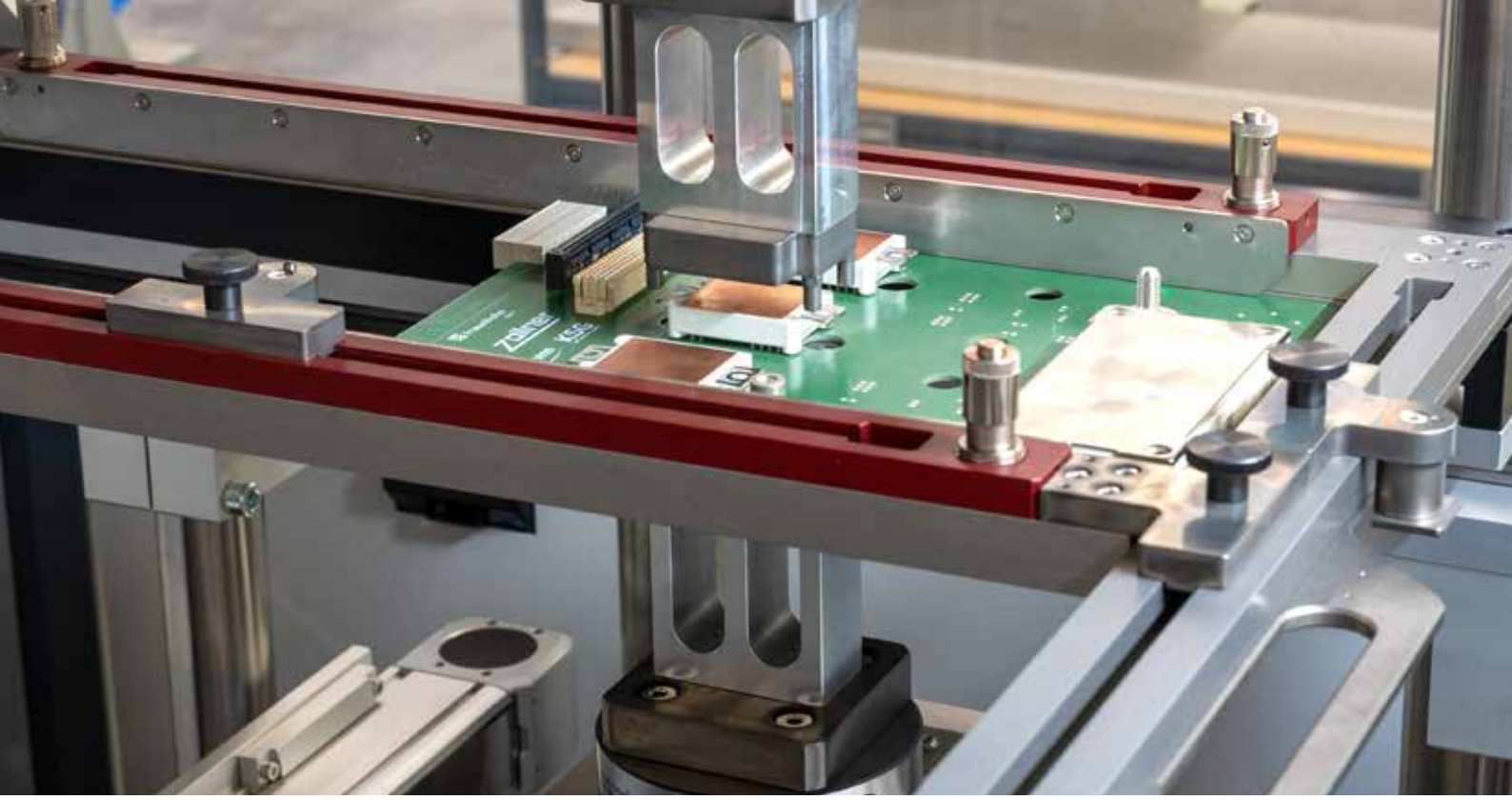

ERSA PRESS-FIT SYSTEMS

Maximum performance for your press-fit applications

Press-fit technology has experienced significant growth in recent years. This well-established technology is becoming increasingly important in power electronics. Ersa's VERSAFIT models meet this demand, offering maximum precision and performance.
Whether for IGBT power modules, high-pin connectors, high-mix manufacturing or large-scale production, the VERSAFIT family offers the perfect balance of quality, cost-effectiveness and sustainability.

Next Level Joining Technology

Press-fit technology has been around since the 1970s. Until now, it has primarily been used for connectors and individual pins in the telecommunications sector. However, in an era of ever-increasing performance and currents, press-fit technology can be utilised much more broadly. Significantly lower contact resistance and higher reliability make the technology particularly interesting for power electronics.

In the battle for every percentage point of efficiency, pressfit connections can outperform soldering. Furthermore, more and more applications are reaching dimensions that soldering can no longer physically accommodate.

Requirements for a press-fit system:

- Force-displacement monitoring
- Maximum precision
- Suitable for large assemblies
- High pressing force
- Short cycle times
- Traceability
- Easy tool change

Contact physics and metallurgy

During press-fitting, oversized pins are always pressed into a smaller hole. Pins are available in various shapes (flexible and solid). This requires a force that deforms one or both joining partners. This creates intensive metallic contact. This contact is further intensified by diffusion processes and is fully formed after around 24 hours.

Conductivity and reliability

Due to the direct metal contact, the contact resistances of press-fit connections are generally lower than soldered connections, despite their smaller cross-sectional area. This also means that losses are lower at high currents. In addition, the reliability of press-fit connections is also better. Mechanical stresses damage them significantly less than soldered connections.

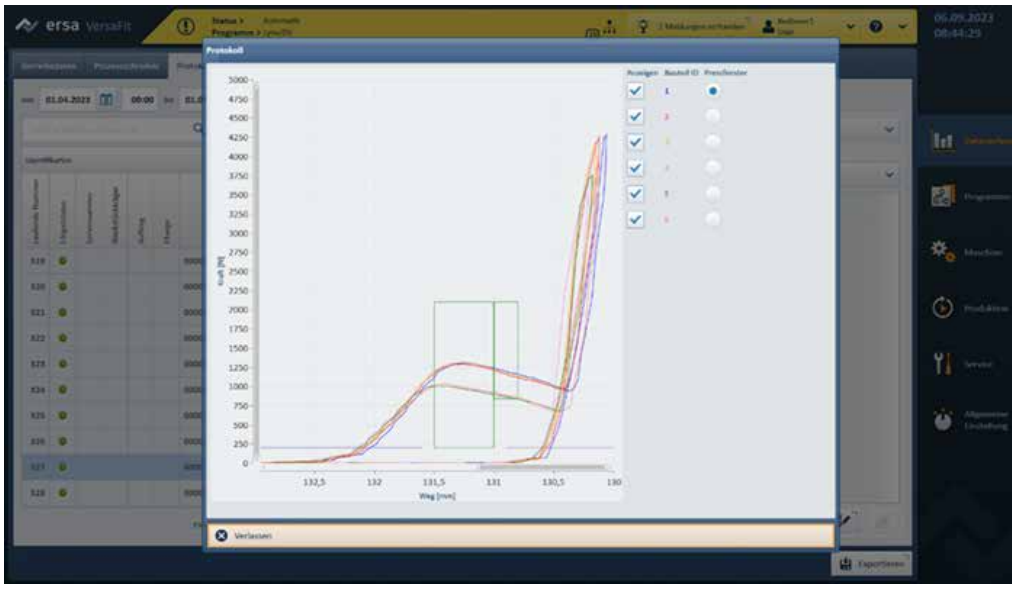

Seamless process monitoring using force-displacement diagrams

Process control using force

The ideal process control is force-displacement monitoring. A sensor records the force during the pressing process, creating a characteristic curve. This can be used for both process monitoring and process control if the pressing process runs automatically. The termination criterion of the press can be defined by means of freely definable monitoring windows, which considerably reduces the stress on the assembly and components. Another important parameter is the number of pins that define the force.

Flatness is key

Power semiconductor modules in particular require a high degree of flatness so that they can be effectively connected to cooling units. The use of press-fit tools with spacers enables the highest standards of flatness. The design for a selective pressing process with smaller tools prevents tilting due to tolerances during pressing. A stable machine construction with a closed frame prevents twisting, which can occur with C-profiles and high forces.

Technology advantage press-fit:

- No thermal load on the PCB and components
- High mechanical load capacity and vibration resistance
- Lowest contact resistances
- No flux residues
- No consumables required

Process flow

1. **Inserting/feeding the circuit board into the machine**
2. **Aligning the assembly and tools**
3. **Starting the press-fit process**
4. **Stopping the press-fit process (according to defined criteria)**
5. **Press-fitting additional components if necessary**

WOULD YOU LIKE TO FIND OUT MORE?

Download our **user guide on press-fit technology**!

VERSAFIT *ONE*

Semi-automatic press-fit system for maximum process reliability

With the VERSAFIT ONE, Ersa presents a new generation of semi-automatic press-fit systems. The compact batch machine sets standards in precision, process reliability, and cost-effectiveness – ideal for medium-sized manufacturing with a high product mix. It combines the proven technology of the high-end VERSAFIT 500 with a new, space-saving concept.

By dispensing with inline capability, it has been possible to reduce the size and achieve an attractive price-performance ratio.

The goods carrier is pushed into the conveyor system with minimal force and the program is started.

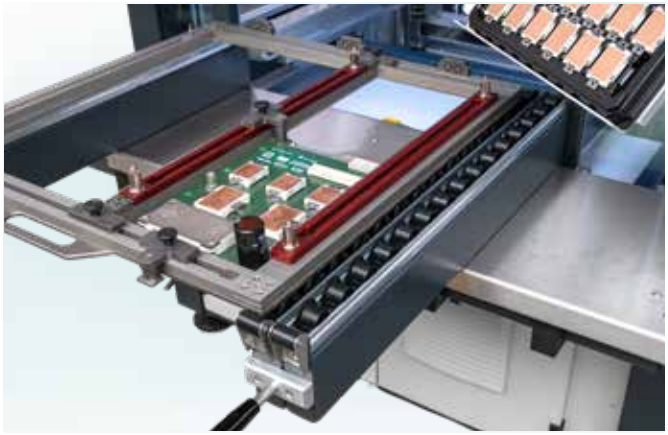

Proven Ersa conveyor system optimized for manual placement.

The machine automatically positions itself and carries out the press-fitting processes reproducibly.

Nevertheless, the VERSAFIT ONE provides comprehensive process monitoring at a benchmark level, including force-displacement measurement with up to 20 freely definable windows per component, as well as real-time quality evaluation.

With clearance heights of 100 mm at the top and 120 mm at the bottom, it can process assemblies measuring up to 610 x 610 mm. This robust, user-friendly technology is based on the Ersa batch selective soldering platform and ensures the highest quality, free from thermal stress or flux. The result is the lowest possible contact resistance and high-load connections for high-power applications. This makes the VERSAFIT ONE an economical solution between manual pressing and fully automated lines, making it ideal for use in the fields of photovoltaics, e-mobility, energy and charging infrastructure.

The robust press unit ensures maximum precision during press-fitting.

Options Ersa VERSAFIT *ONE*

- Transfer table for additional product carriers
- Storage for component blisters (400 mm x 300 mm)
- Traceability/MES
- PCB thickness measurement
- Automatic tool rotation
- Force test
- Tool storage inside the machine
- Up to 5 upper and lower tools

Unique technological advantage:

- Servo-electric press cylinder
- High flexibility
- Permanent process monitoring
- Easy maintenance
- Conveyor with slide rails for goods carriers
- Loading table with roller conveyor

Further information:

VERSAFIT 500

Inline-pressfit system for maximum throughput

The Ersa VERSAFIT 500 is an effective and highly flexible inline system that increases competitiveness in electronics manufacturing by using press-fit technology.

In some applications, press-fitting offers significant advantages over other processes, including more reliable connections, shorter production cycle times, no additional heat load on the assembly and no flux residues. Press-fitting also eliminates the need for nitrogen gas flushing and significantly reduces energy consumption. With the VERSAFIT 500, you can realize cost advantages and improve assembly quality.

Traceability and process data

Building on Ersa's extensive experience in integrating production equipment into the infrastructure of MES, ERP, and traceability systems, the VERSAFIT 500's control system and software ensure complete process control of the press-fit operation.

The data collected in this way is available to the user in various formats and can be processed accordingly.

Flexibility and precision

To meet the requirements for high flexibility, the VERSAFIT 500 has a magazine for a wide variety of inpress tools.

The user specifies the tool change or selection and orientation, as well as the associated process parameters, in the control program.

The programs are selected and activated via coding of the assembly or the workpiece carrier.

Circuit board conveyor on x-/y-axis system

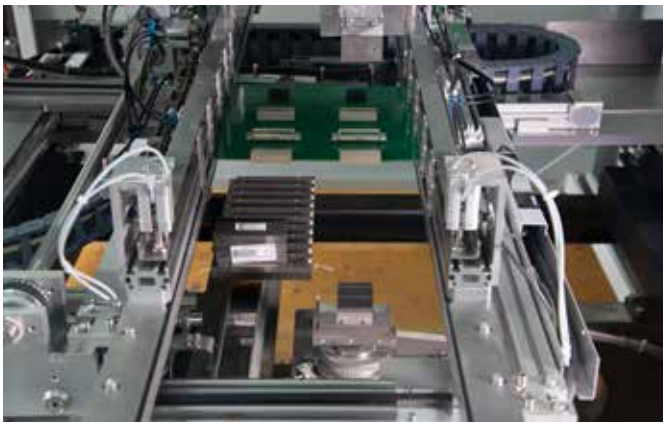

Lower press unit with tool changer

The programming is based on automatic placement machines. The position of the components on the assembly determines the positioning of the x/y table under the press cylinder.

The number of pins per component and the geometry of the press-fit zones determine the pressing force, which is recorded as a function of the punch travel in order to produce the force- displacement diagram of the component. Process monitoring is performed using envelope curves with selectable tolerance fields in the force-displacement diagram.

Basic configuration Ersa VERSAFIT 500

- Individual width adjustment
- Tool rotator
- ERSASOFT 5
- Integrated control cabinet
- Touchscreen operation on the computer
- x-/y-axis adjustment and password protection

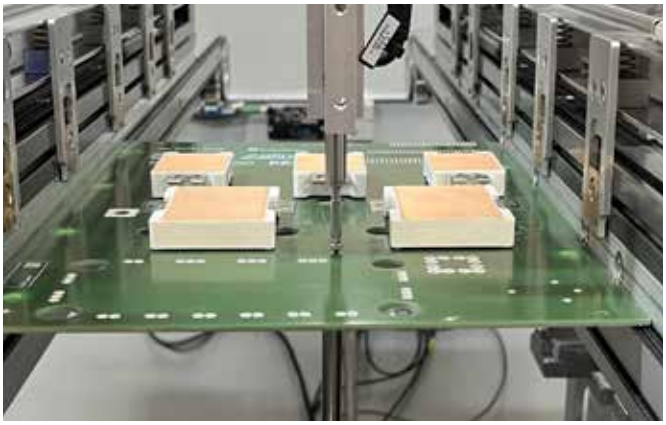

Tactile PCB thickness measurement

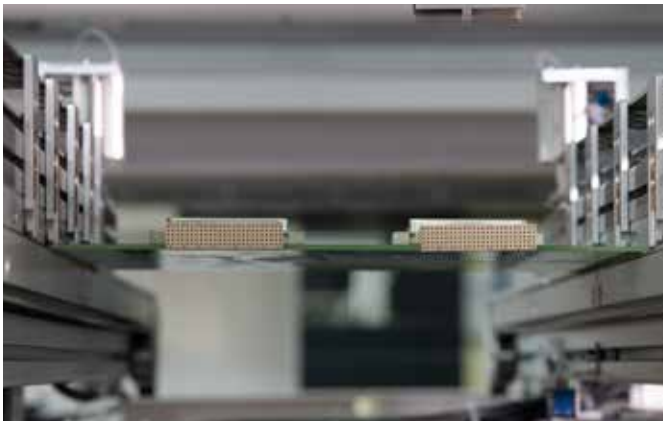

Proven Ersa conveyor system

Unique technological advantages:

- Servo-electric press cylinder
- High-precision x-/y-table
- Tool changer for up to 10 tools (5 top & 5 bottom)
- High flexibility
- Tool selection via control program
- Permanent process monitoring
- Flat belt conveyor
- Very easy to maintain

Further information:

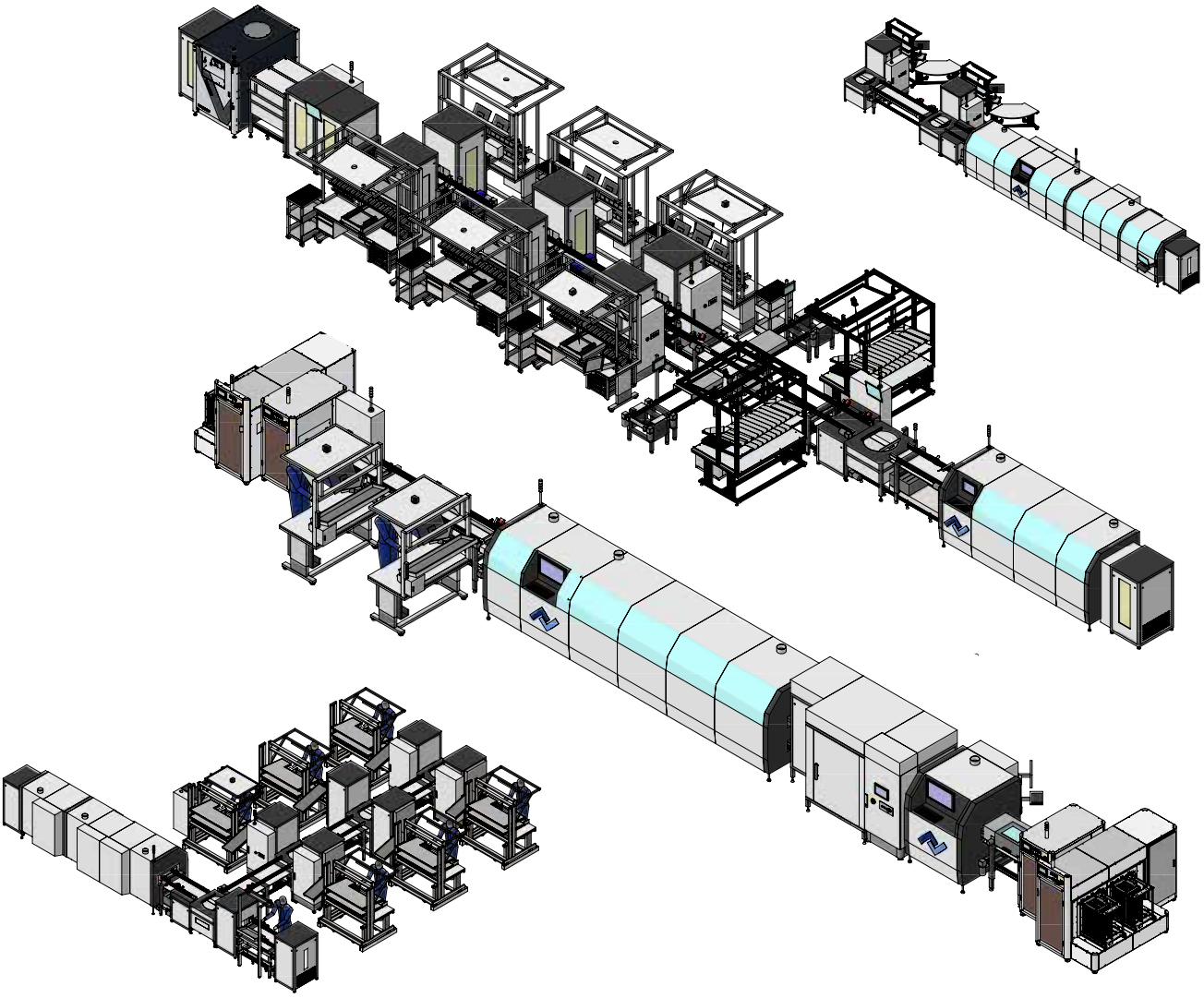

LINE AUTOMATION

System of almost unlimited possibilities

Ersa stands for comprehensive solutions in electronics manufacturing – as a system supplier, we deliver intelligently networked line configurations tailored specifically to your needs. The result: maximum efficiency and the highest quality with consistently high utilization and significantly increased throughput.

Our soldering lines think for themselves: while production continues uninterrupted, the system automatically adjusts to the next product with a simple scan. No downtime, no compromises – simply smart.

Product scope:

- Individually configurable according to customer requirements using a modular system
- Connections to MES and productivity systems
- Workstations ranging from offline to fully automatic
- Brush modules
- Lifting and lowering stations
- Integration of third-party modules
- Line controllers
- Circulation systems
- Interlinking of a wide variety of process systems
- VERSAGUIDE/VERSAEYE integrated
- Turning stations

Further information:

Ersa VERSAPRINT 2 TIM

Economical and reproducible thermal paste printing

To ensure the efficient use of power semiconductors such as IGBTs (insulated-gate bipolar transistors), it is essential to establish optimal electrical connections to the circuit board and high-quality thermal connections to the heat sink (housing or cooling unit).
The ideal combination for a high-quality assembly process is the combination of the VERSAFIT press-fit system for electrical connection and the VERSAPRINT 2 TIM (Thermal Interface Material) stencil printer for thermal connection to heat dissipation. After the press-fit process, the assembly is automatically conveyed to the printer where thermal paste is printed onto the IGBTs. The direct coupling of the press-fit and printing process reduces handling steps and increases line throughput.

Highlights:

- Component clearance at bottom up to 100 mm
- Alignment accuracy - 12.5 µm @ 6s
- Closed-loop squeegee force control
- Paste roll diameter detection
- Paste replenishment from large containers
- Heavy-duty conveyor for up to 15 kg
- Flat belt conveyor
- Options can be retrofitted in the field

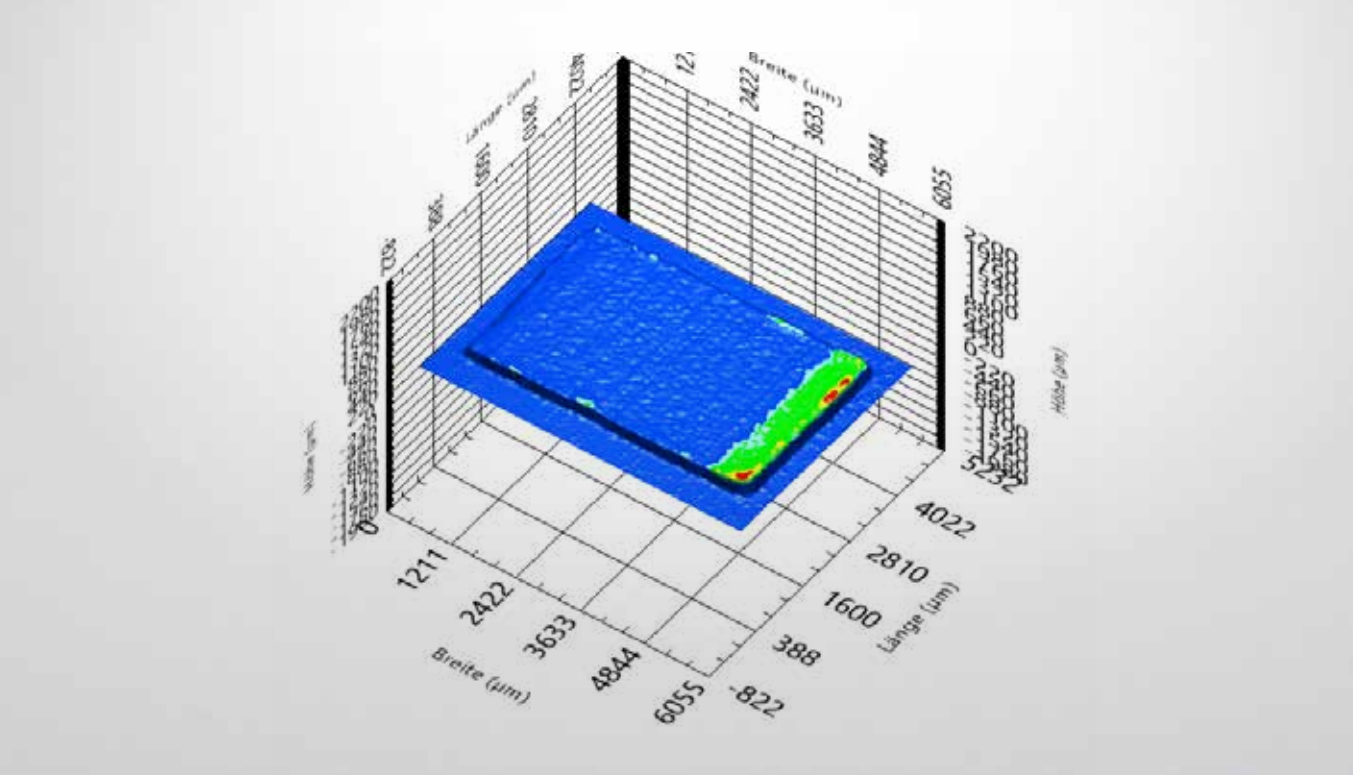

Optionally available: 3D inspection of thermal paste printing

The VERSAPRINT 2 TIM offers all the advantages of stencil printing combined with precise process parameters for optimal thermal paste processing. This achieves reproducible volume application, which can be monitored using the printer's integrated inspection system. In combination, VERSAFIT and VERSAPRINT 2 TIM form a powerful duo for power electronics applications.

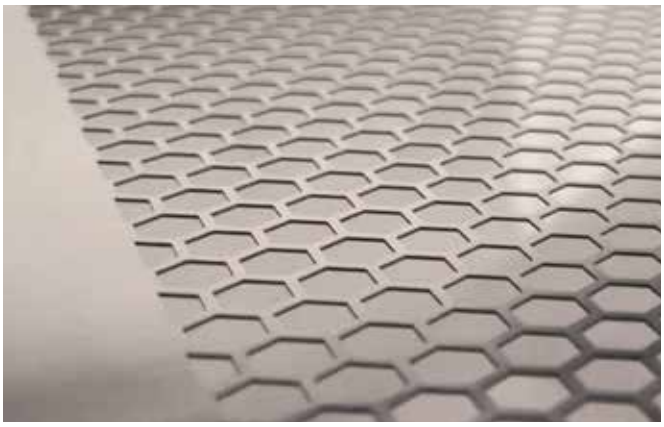

Comb structure for thermal paste printing

Basic configuration Ersa VERSAPRINT 2 TIM:

- Program-controlled width adjustment
- Automatic brand recognition
- Automatic template underside cleaning
- Efficient program creation
- Touchscreen operation
- High ease of maintenance

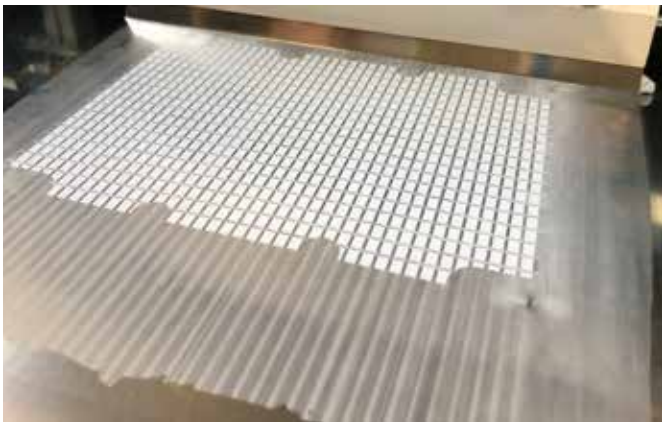

Thermal paste in a rectangular grid

Further information:

Technical data Ersa VERSAFIT ONE

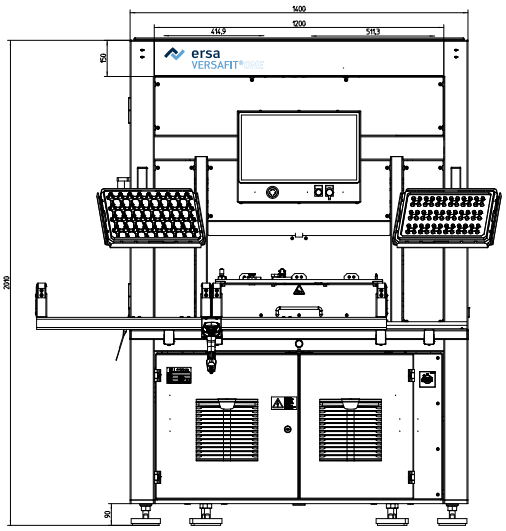

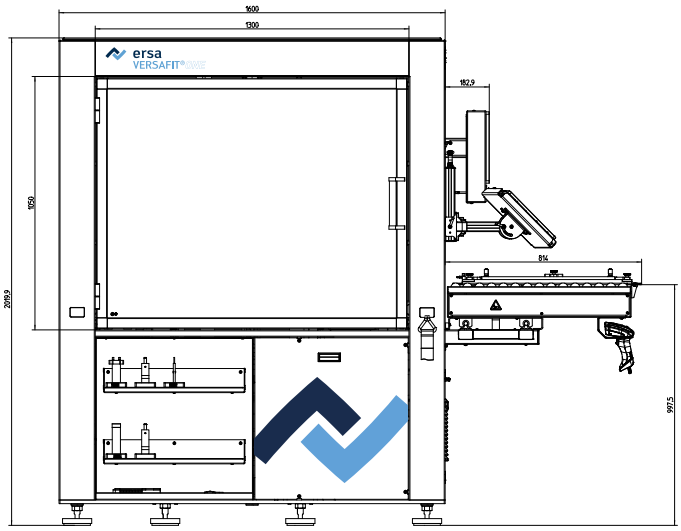

Dimensions	
Length:	1600 mm & 800 mm loading table
Width:	1.400 mm
Height:	2.010 mm
Weight:	1.400 kg
Press-fit	
Press force:	5 kN
Positioning accurancy press axes:	± 0,1 mm
Linearity force sensor:	±5 % FSO adjustable measuring range
Measuring principle force sensor:	Piezo electric
Tool rotation:	360°
Tool magazine (optional):	externally manual; for 10 tools
Tool length:	max. 150 mm
Electrical data	
Voltage:	4-wire network, 3 x 400 V oder 3 x 480 Y/277 V
Power tolerance range:	± 10 %
Frequency:	50 / 60 Hz
Power consumption:	0,95 kW
Safety fuse:	3 x 20 A
PCB conveyor	
Type:	tool carrier
PCB width:	max. 610 mm
PCB length:	max. 610 mm
Edge clearance:	3 mm (5 mm for weights > 10 kg)
PCB Bottom-side clearance	max. 120 mm
Positioning accuracy of x-/y-axis system:	± 0,2 mm

Technical data Ersa VERSAFIT 500

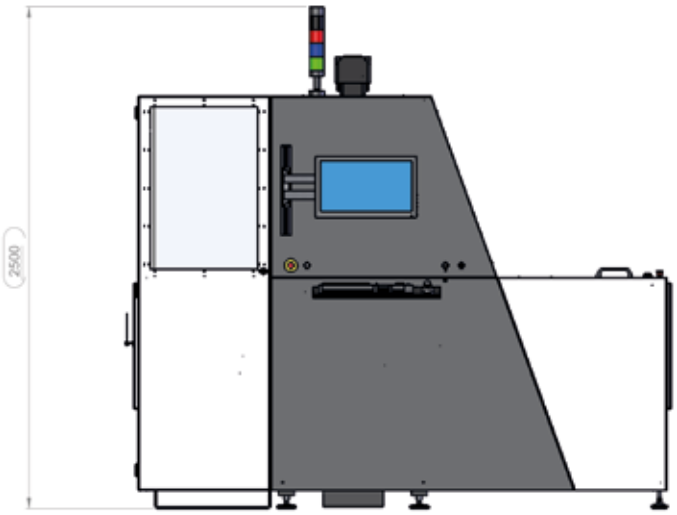

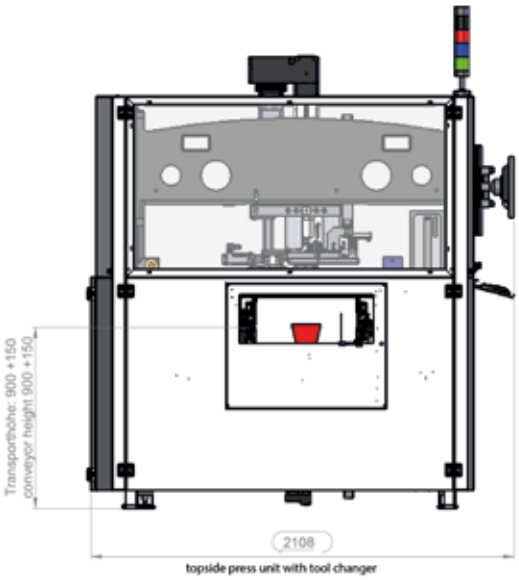

Dimensions	
Length:	2.680 mm
Width:	2.110 mm
Height:	2.500 mm
Weight:	2.300 kg
Press-fit	
Press force:	50 kN
Positioning accurancy press axes:	± 0,15 mm
Linearity force sensor:	± 5 % FSO adjustable measuring range
Measuring principle force sensor:	Piezo electric
Tool rotation:	360 °
Tool magazine (optional):	5 top & bottom
Tool length:	max. 100 mm
Electrical data	
Voltage:	5-wire network, 3 x 230 V/400V, N, PE
Power tolerance range:	± 10 %
Frequency:	50 / 60 Hz
Power consumption:	5 kW
Safety fuse:	3 x 25 A
PCB conveyor	
Type:	flat belt conveyor
PCB width:	max. 508 mm
PCB length:	max. 508 mm
Edge clearance:	3 mm (5 mm for weights > 10 kg)
PCB top-side clearance	max. 100 mm
PCB bottom-side clearance	max. 100 mm
Positioning accuracy of x-/y-axis system:	± 0,15 mm

Technical data Ersa VERSAPRINT 2 TIM

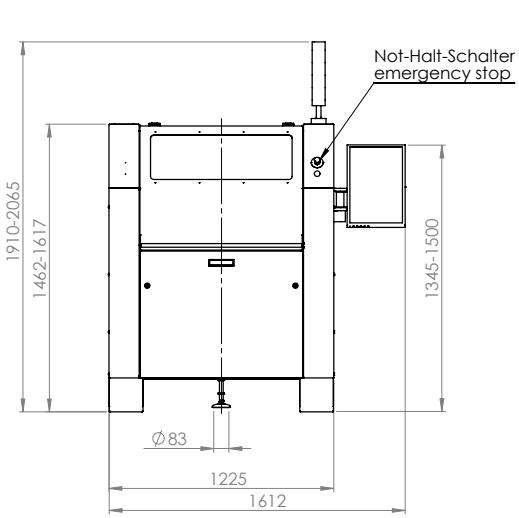

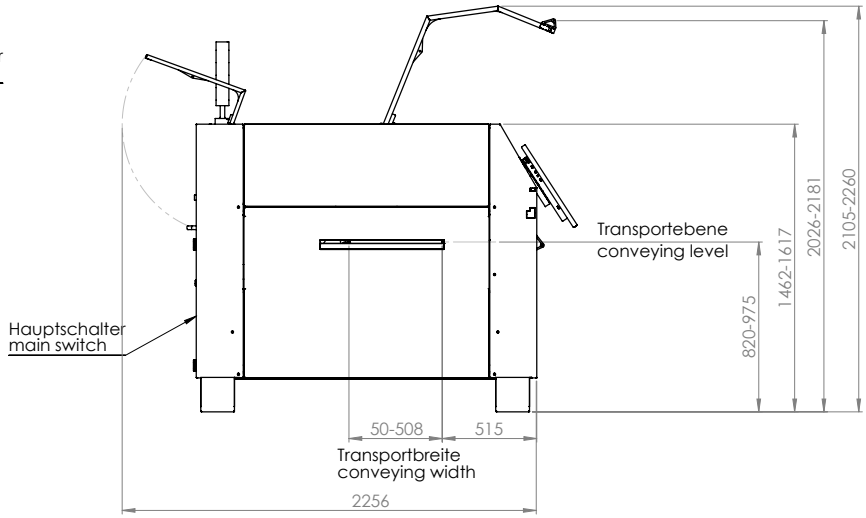

Substrate handling	
Maximum substrate size:	550 mm x 500 mm
Maximum printing size:	680 mm x 500 mm with workholder possible
Minimum substrate size:	50 mm x 50 mm
Substrate thickness:	0,5 … 6 mm; 0,8 ... 6 mm with retractabele clamping
Transport height:	820 ... 975 mm 870 ... 975 mm (with manual loading or robotic loading)
Print parameters	
Print speed:	5 … 200 mm/s
Print force:	0 … 260 N
Separation speed:	0,1 … 50 mm/s
Print mode:	alternating, multiple print, flood/print
Paste:	kneading programmable
Stencil mounting	
Maximum stencil size:	737 mm x 737 mm x 40 mm
Minimum stencil size:	450 mm x 450 mm x 25 mm
Adjustable without tools:	yes
Performance	
Repeatability:	± 12,5 µm @ 6 Sigma (CPR > 2)
Print accuracy:	± 25 µm @ 6 Sigma (CPR > 2)
Cycle time:	10 s + print
Vision	
Fiducial size:	0,5 … 3 mm
Fiducial types:	all synthetic fiducials or any unique shape within the camera's field of view
Camera:	area camera
Field of view:	10,4 mm x 8,3 mm
Inspection speed:	1 picture/s
Resolution:	8 µm/pixel
Dimensions	
Width x depth x height:	1225 mm x 1855 mm x 1617 mm
Weight max.:	860 kg
Electrical data	
Power supply:	5-wire network, 3 x 400 V, N, PE 50/60 Hz, 16 A
Air supply:	6 … 10 bar, 5 l/min; in vacuum cleaning mode 5.5 l/s

Premium services from the world market leader

We are always there, wherever you need us

All informations online:

Certified Kurtz Ersa eLearning.

Discover New Horizons.

EDUCATION
by kurtz ersa

Start your training and further education for electronics production!

- Unique Training System for Machine Soldering & Stencil Printing
- Certified and Individual Personnel Qualification
- Individual process and machine trainings courses – 24/7, Worldwide and device-independent

All information and registration online:

ELECTRONICS PRODUCTION EQUIPMENT

Worldwide presence

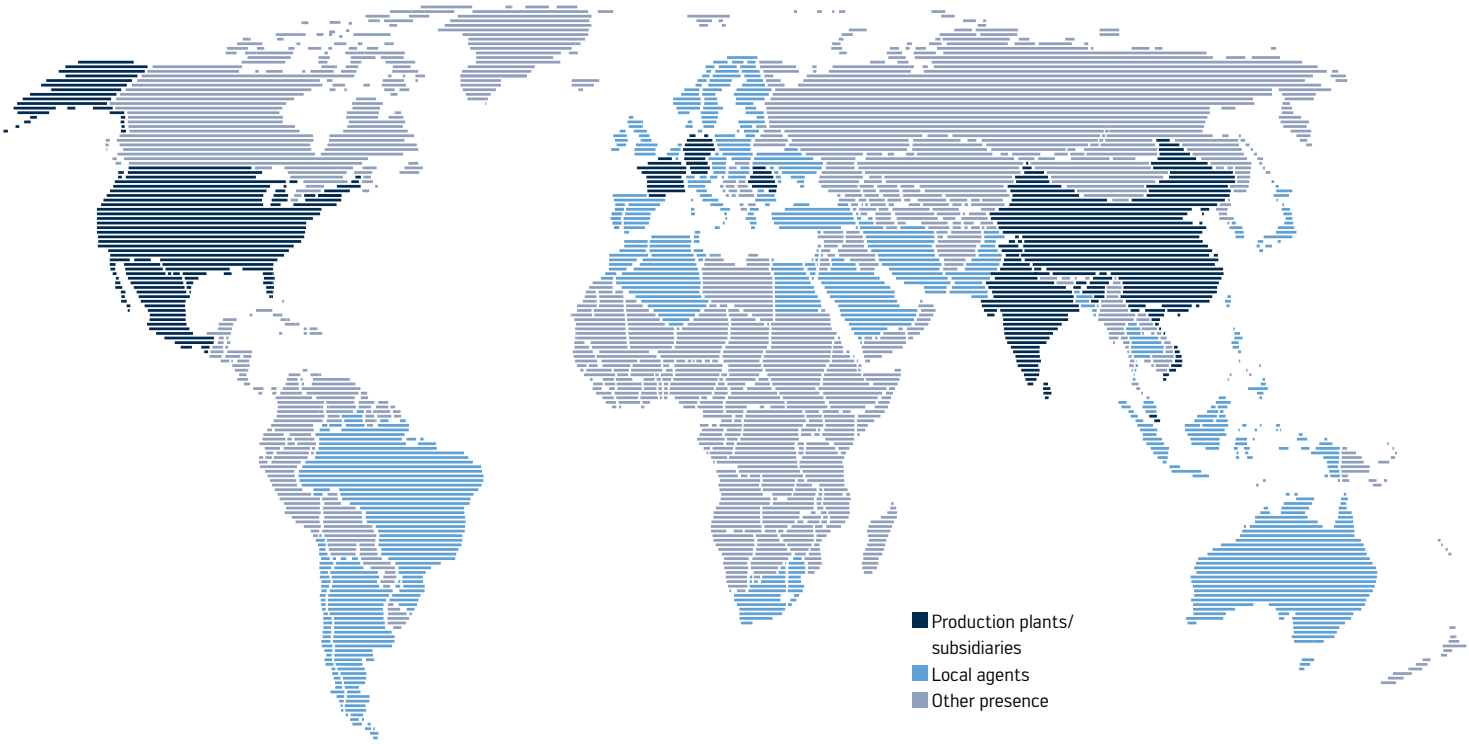

USA
Kurtz Ersa, Inc.
Plymouth, WI
usa@kurtzersa.com

Mexico
Kurtz Ersa, S.A. de C.V.
Guadalajara
info-kmx@kurtzersa.com

Kurtz Ersa Manufacturing Mexico
Ciudad Juárez
info-kemm@kurtzersa.com

China
Kurtz Ersa Asia Ltd.
Hongkong
asia@kurtzersa.com

Ersa Shanghai
Shanghai
info-esh@kurtzersa.com

Vietnam
Kurtz Ersa Vietnam Company Limited
Bac Ninh
info-kev@kurtzersa.com

Singapore
Kurtz Ersa Singapore (Pte. Ltd.)
info.kes@kurtzersa.com

India
Kurtz Ersa India
Smart Production Technologies
Private Limited
Bangalore
india@kurtzersa.com

France
Kurtz Ersa FRANCE
Haguenau
kefrance@kurtzersa.com

Romania
Kurtz Ersa Romania S.R.L.
300748 Timisoara
info.romania@kurtzersa.com

Ersa GmbH & Co. KG
Leonhard-Karl-Str. 24
97877 Wertheim/Germany

Phone +49 9342 800-0
Fax +49 9342 800-127
info@ersa.de

www.ersa.de
www.ersa.com

kurtz ersa

423920 - 03/2026 | subject to change | © Ersa GmbH & Co. KG