Aurotek®
A Complete Solution from One Source

Y-S330L
PCB Depaneling System

2018 Jan

Video
https://safesync.aurotek.com/app#folder/CRKJ/Standard/?a=YqsHeLGwSrs

www.aurotek.com.tw

Y-S330L PCB Depaneling system

www.aurotek.com.tw

Feature Introduction

Spindle Motor
High-speed spindle motor to reduce mechanical stress during cutting (58,000 rpm).

Graphical User Interface
The user interface is based on the Windows GUI operating system and is easy to use. A CCD camera is also used to display a 10X image of the PCB to improve training precision.

Safety Device
Use block-out infra-red sensors to reduce the risk of personnel inadvertently intruding on the processing area.

Tool Break Detection
•During every routing task, this system will detect any variable change of bit, and notice the user with alarm system.

Axial Motor
Uses a high precision/response AC servo motor and modular actuator.

Controller
PC-based 4-axis motion controller.

Twin Slides
The twin slides allow for alternate feeding, reducing idle time and improving productivity.

Aurotek®

Specification

Setting Fixture	2 stations
Working Area	X:450mm, Y:520mm, Z:60mm
Cutting Area	Max：X:450mm, Y:520mm
PCB Component Height	Top side：15mm Bottom side：35mm (with universal jig)、45mm (with specific jig)
PCB Thickness	0.5 to 5.0 mm
Router Bit Diameter	0.8 ~ 2.0 mm (Optional for more than 2.0mm)
Precision of Cutting	± 0.08mm
Positioning Accuracy	± 10 μm
Positioning Repeatability	± 10 μm
Number of Axis in use	4 Axes (X, YL, YR, Z,)
Driving Speed (Max)	X, YL, YR : 1000mm/sec, Z: 750mm/sec
Cutting Speed (Max)	X, Y, Z: 100mm/sec
Spindle Motor	High speed variable frequency motor 265W (Max.58,000rpm) ; Option: 4025DC-T: 470W (Max:30,000rpm) ; 4033:500W (Max:100,000rpm)
Bit Change	Manual/ Automatic as an OPTION
Cutting Ability	Linear, Circular, U-curve, Arc, L-curve
Motor of Axis	4 Axes (200W AC Servo motors)
Bit Shift Count	1~9 (Availability depends on PCB thickness)
Route Planning	Direct coordinate input or manual guiding with × 10 CCD camera

Aurotek®

Specification

Safety Area Sensor	Standard
Bit Break Detection	Standard
Program Storage	HDD
Program Backup	USB
Operating System	Windows 7
Man-Machine Interface	LCD Monitor + Keyboard + Mouse
PCB Loading/Unloading	Manual
Power Supply	3 Phase AC220V±3% 50 Hz/60Hz, 4.0kw
Air	0.5Mpa
Dimensions	(W)1810mm × (D)1409mm × (H)1350mm + 280mm Signal Light
Weight	approx. 720 Kg
Base Height	900mm Max:930mm
Vacuum Cleaner	YSF-V605 5HP 3.7kw

Specification

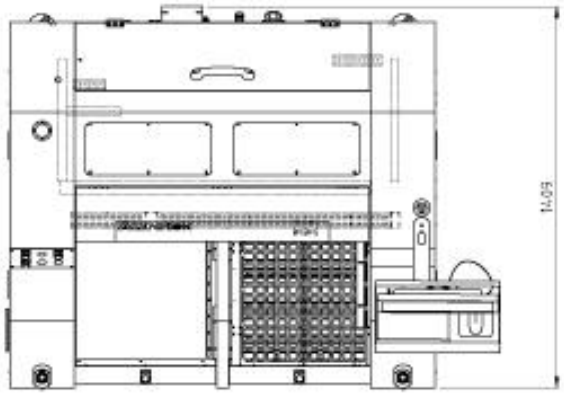

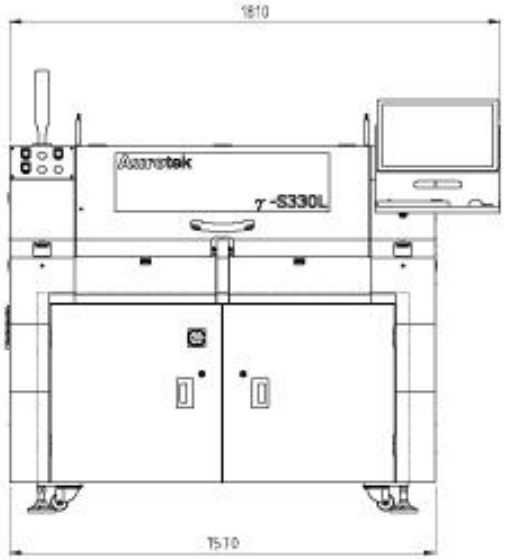

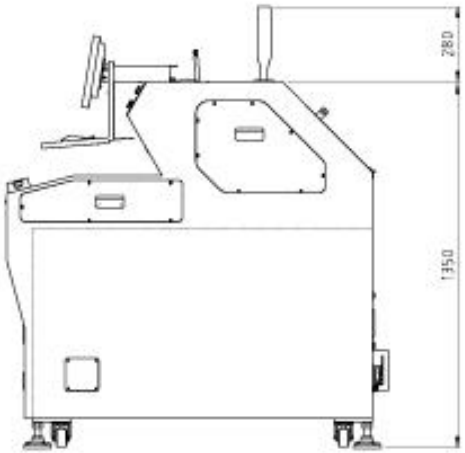

Advantages & Benefits

- High Speed & Precision
- Large Processing Area
- Machine Customization Available
- 24Hr Service & Support Website
- Universal Jig & Customizable Jig
- Cost-Effective
- High C/P Values
- Warranty starts from at least 1 year

Aurotek®

Advantageous Genes

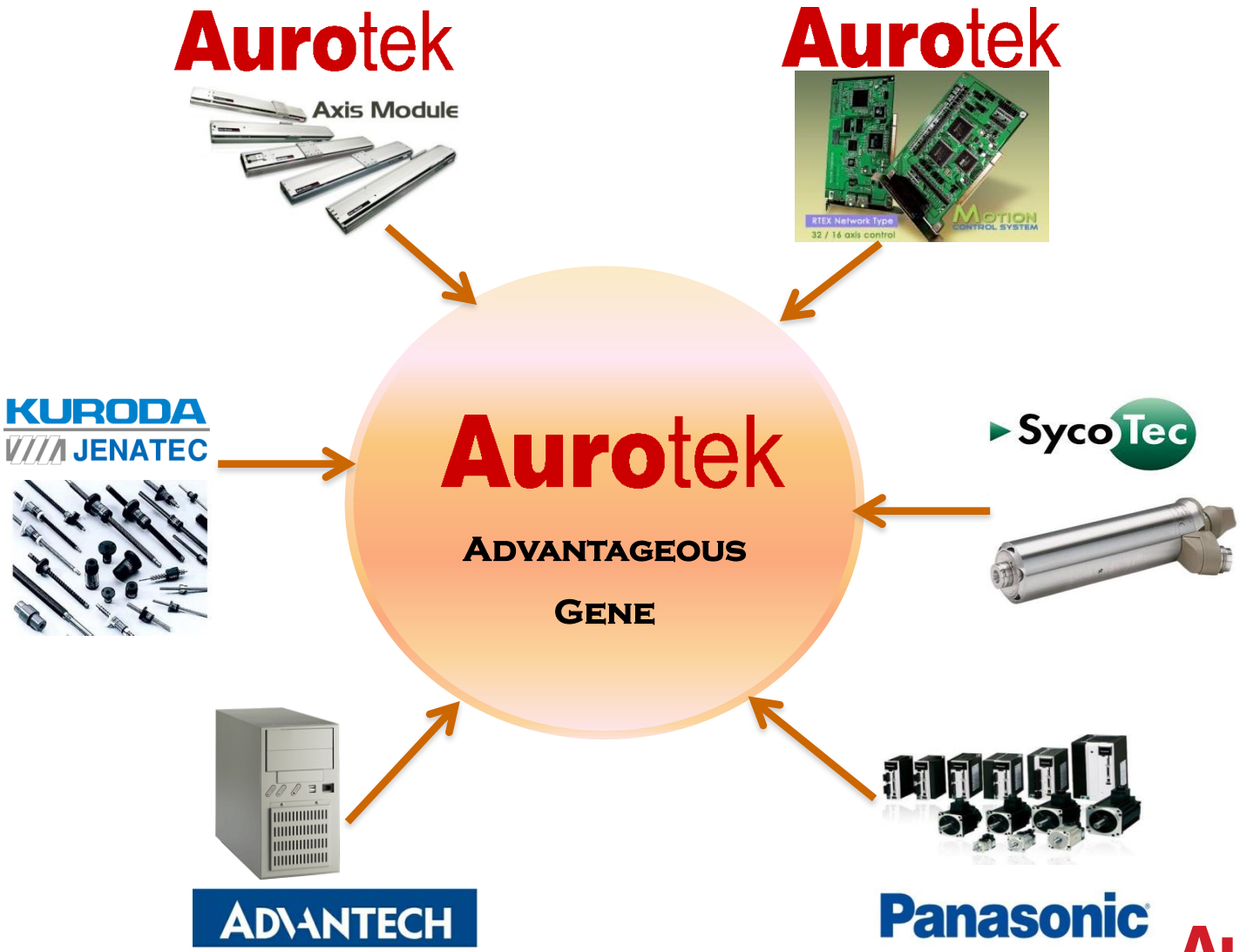

Aurotek®

Product Overview

Strong inner / outer mechanical structure

Using Aurotek own brand high precision actuator module.
X, YL, YR, Z are driven by individual Panasonic servo motor.

Aurotek TAIWAN EXCELLENCE

Panasonic

Aurotek®

Spindle & Motor

SycoTec Spindle 4026

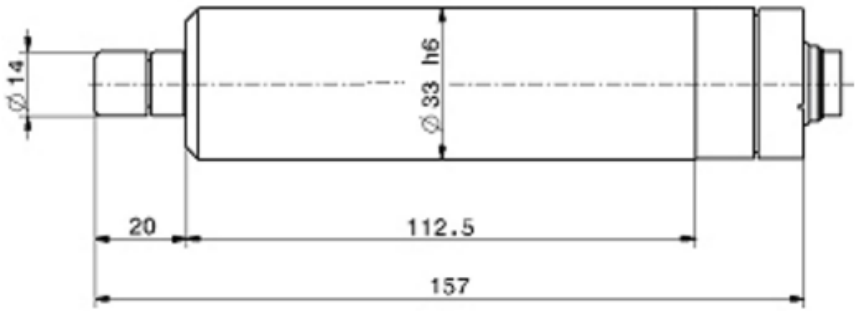

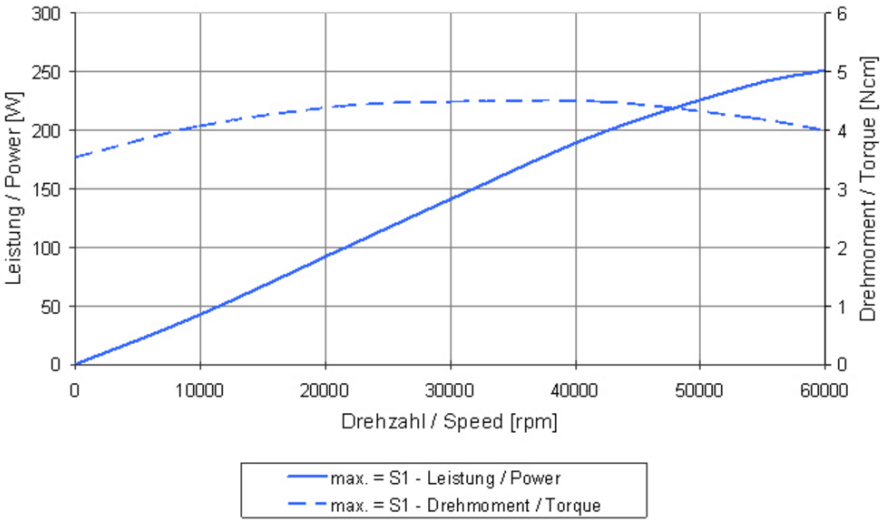

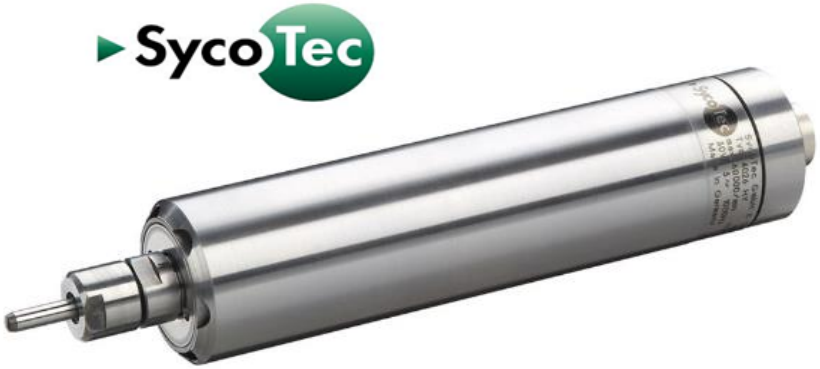

Motor system: 3 phase asynchronous motor
Speed range: 5,000~60,000 rpm
Voltage: 30V
Current: max. 8A
Torque: 4.5 Ncm
Frequency: 83~1,000 Hz
Power: 265W
Weight: 700g
Bearing system: 2x Hybrid, 1 x Steel, lifetime lubricant
Protection category: IP 20
Working position:
Load direction: axial + radial
Run-out (taper): ≤ 1.5 μm
Cooling system: Self-ventilation fan
Cooling via clamping bracket
Housing material: Stainless steel

Product Overview

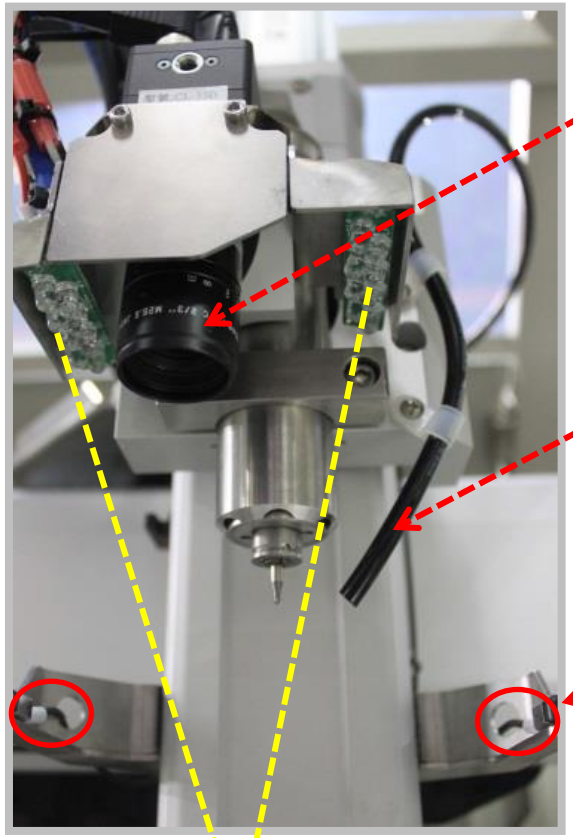

CCD camera with LED light

CCD Supports coordinate setting. It checks fiducial marks and simulates cutting routes before actual cutting.

Ionizer

Ionizer focuses on cutting point during cutting process. It reduces electrostatic discharge effectively.

Bit break check sensor

A standard item in r-S330 series. Sensor detects bit breakage after every cutting movement.

LED lights

Routing Bit & Specific/Universal Jig

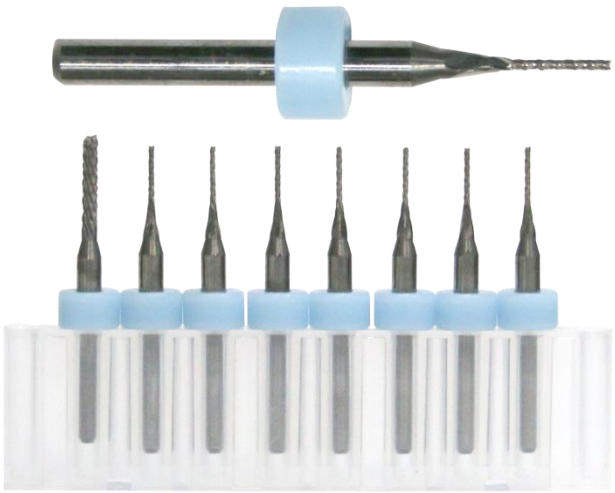

Bit Size
Ø 1 ~ Ø2 mm

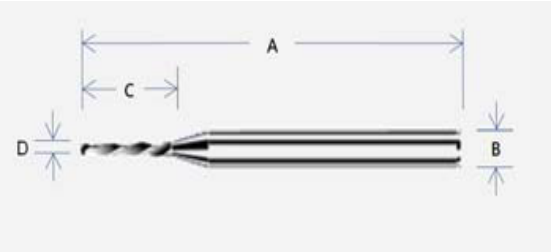

LCF; Down Cut; Carbide end mills
Overall Length (A): 38.2 ±0.30 mm
Shank Diameter (B): 3.175 mm
Cutting Length (C): 6 ±0.50 mm
Cutting Diameter (D): 1.00 1.20 1.50 1.60 2.00 mm

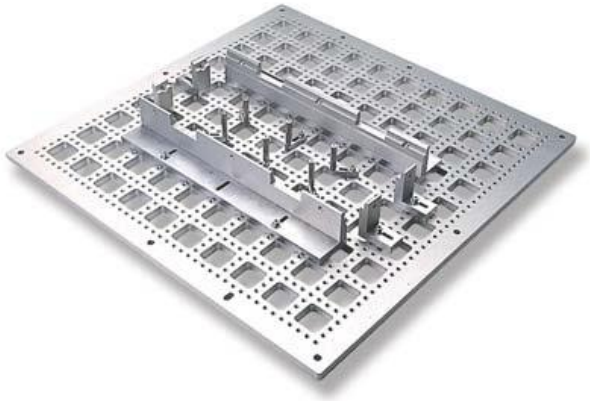

Universal Jig
Supports variable PCB cutting

Specific Jig
provide a more stable and accurate routing environment

Dust Collector

YSF Series Vacuum Cleaner

YSF vacuum cleaner is designed for PCB Separator Series to collect the dust & scrap generated by router cutting. High horse power motor & high efficiency fan ensure the suction with excellent efficiency.

Type	YSF-V605
Dimensions (WxDxH)	780x665x1900mm
Weight	230 kg
Power Supply	3 phase 50Hz / 60Hz 220V
	3.7 kw
Motor Power	5 HP
Inlet Wind Speed	28m/sec
Inlet Wind Capacity	40 m^3/min
Inlet Wind Pressure	300 mm-Ag
Inlet Diameter	150mm
Outlet Diameter	203mm

Aurotek®

Superb Product Features

1.Large Dual Working Stations

This provides an alternatively in-and-out working space to limit idle time, which in turn reaches the utmost output value.

Working Area:
450*520*60mm * 2 Stations

2. Safety Area Sensor

Aurotek always pays our best attention to prevent any accident during operation. With immediate stop function, it abides by CE standard.

Superb Product Features

3. Maximum 9 Routing Bit Sectioning

User may set a designated distance, and have the routing bit shift down in order to make a new section of touting bit to cut boards. It multiplies the lifespan of the routing bit.
Note: **The viable number of section depends on PCB thickness and bit length**.

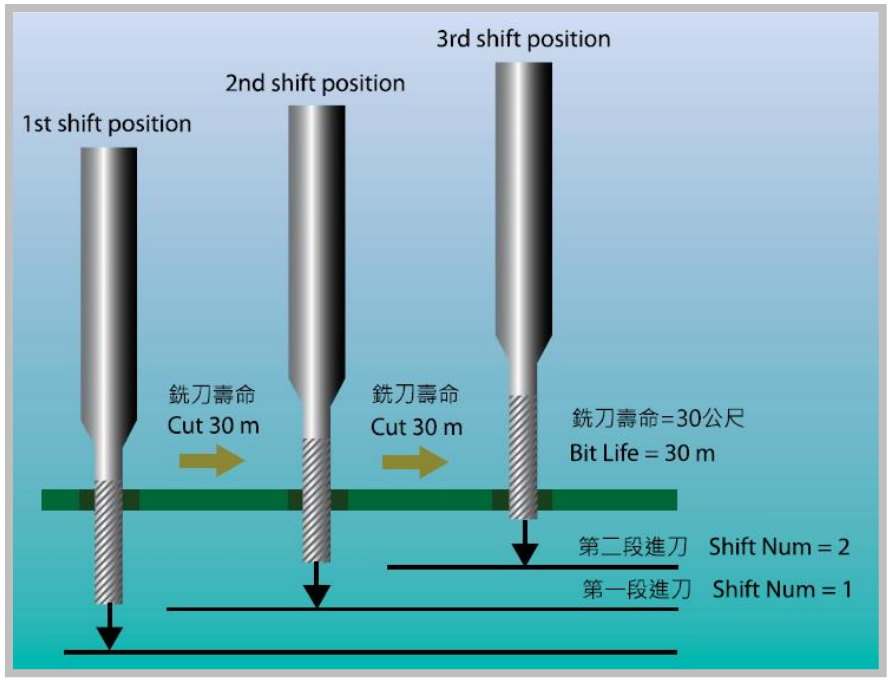

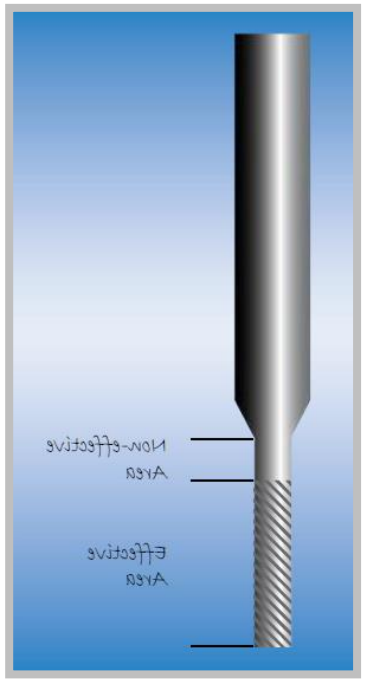

Superb Product Features

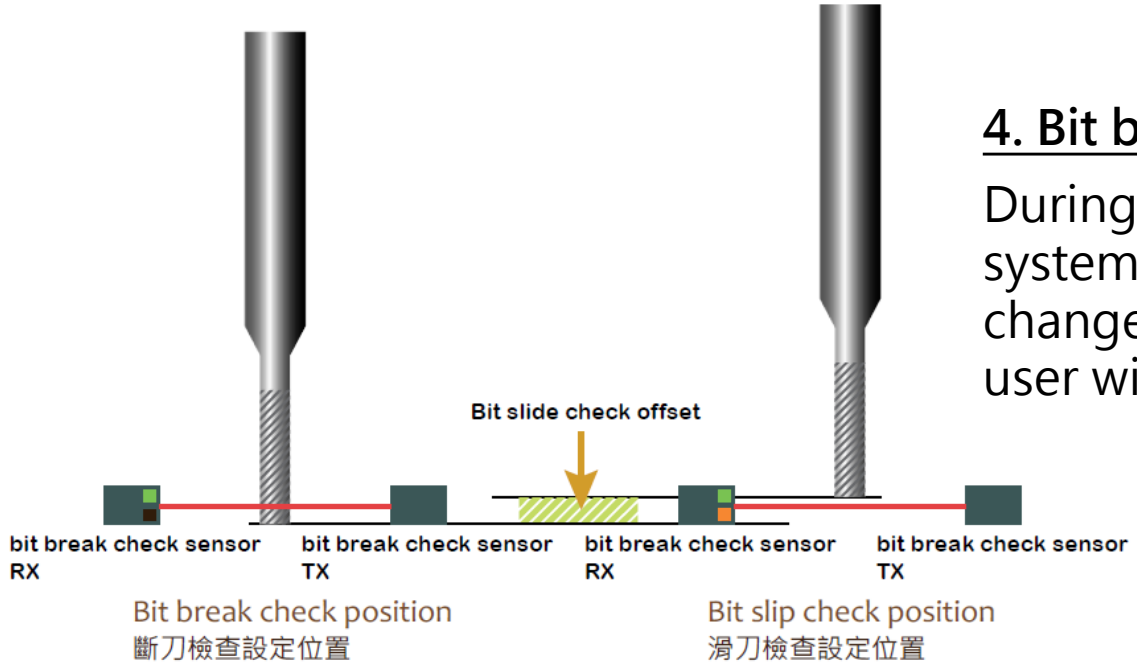

4. Bit break detection Sensor

During every routing task, the system detects any variable change of bit, and notices the user with alarm system.

5. Bit Slip Detection Sensor

The condition of routing bit directly influences the cutting performance. Thus, we equipped with bit drop sensor to monitor whether the bit is clipped properly and its using condition.

Superb Product Features

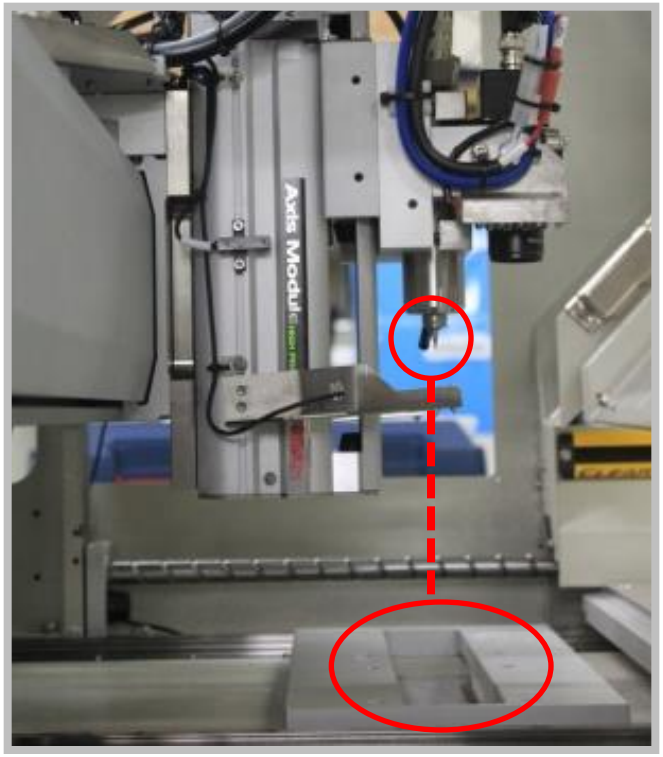

6. Small Dust Orifice

The vacuum suction is just under bit cutting position, which focuses on the actual cutting area. Together with the use of ionizer that remove ESD during bit cutting, these enhance dust collection efficiency significantly.

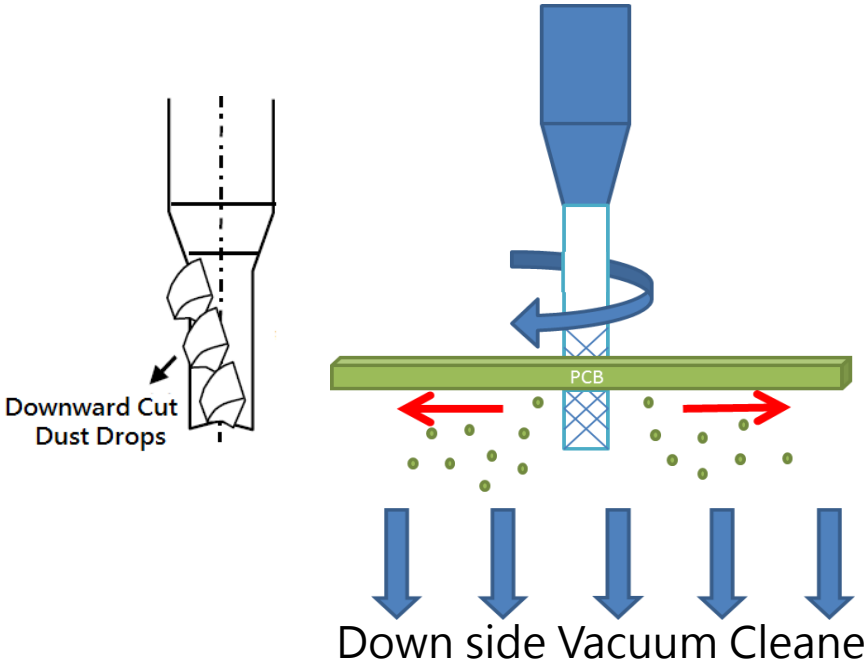

Superb Product Features

7. Graphical User Interface

Window 7 IPC with CCD X10 zoom-in image makes programming easier & increases the accuracy of cutting point setting.

8. CCD Image Pathway Simulation

CCD image can check & simulate the path of routing to reduce unnecessary mistakes before actual cutting.

Superb Product Features

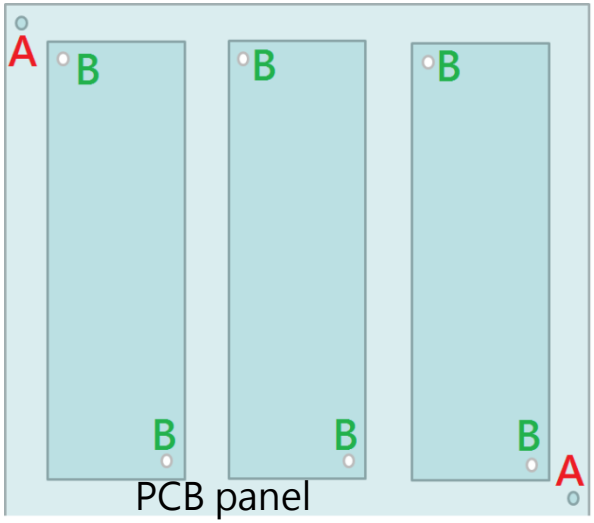

PCB panel
A: Main Fiducial Mark
B: Local Fiducial Mark

9. Multiple Fiducial Mark Alignment

Fiducial marks are automatically checked before every cutting process. If misalignment is detected within pre-set tolerance, the routing path will translate according to the fiducial position shift. Should misalignment over tolerance, cutting process will be stopped immediately with a machine alarm.

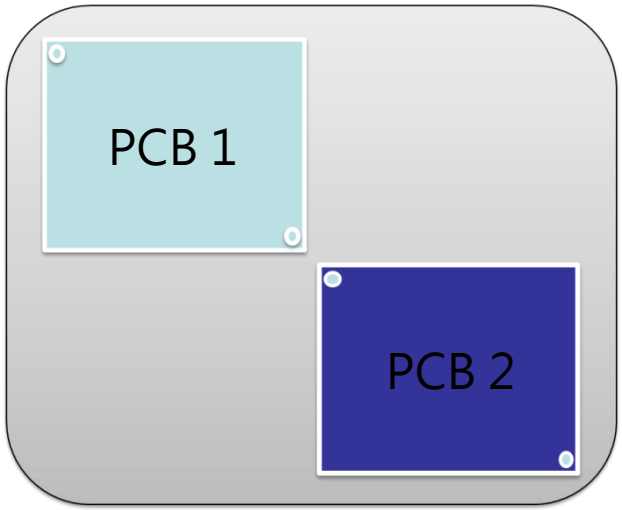

10. Cutting Path Translation

By aligning the fiducial marks, our program enables cutting path translation to other identical PCBs. This means save time when setting up cutting path.

Superb Product Features

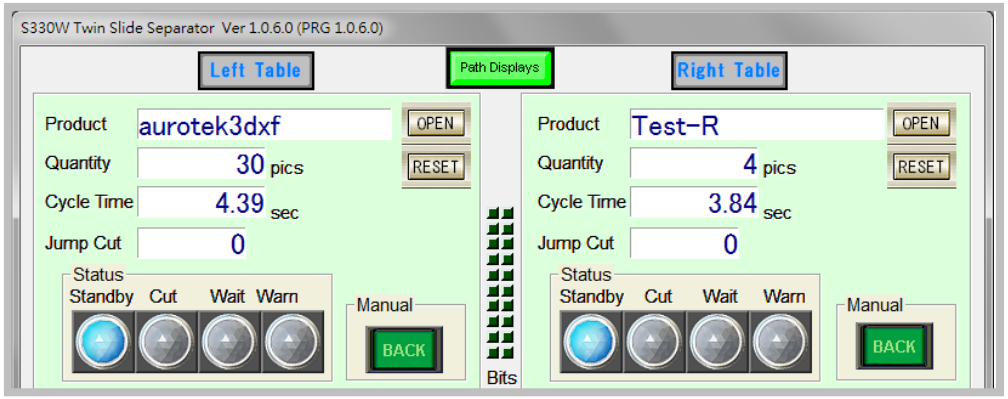

11. Production Information

Showing product name, produced quantity, cycle time, and etc.

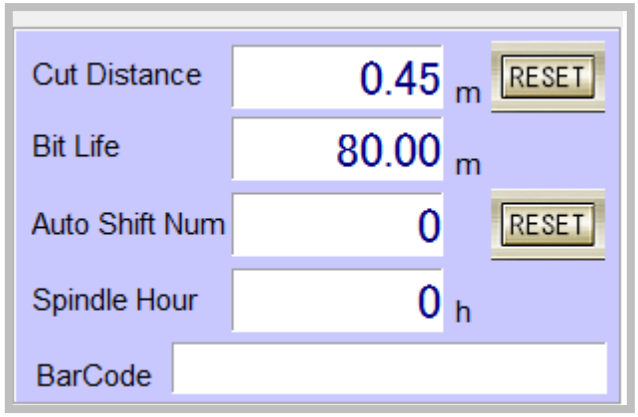

12. Bit & Spindle Lifespan Management

When cumulated cut distance reaches pre-set bit life, the program will give alert for bit change notification.

Superb Product Features

20170412_Merged.csv - Microsoft Ex

	A	B	C	D	E	F	G	H	I	J	K	L
1	Date	Time	L PCB Board serial Number	L Product Name	L Qty.	L Cycle Time(sec)	Opeartor ID Number	R PCB Board serial Number	R Product Name	R Qty.	R Cycle Time(sec)	Opeartor ID Number
2	2017/4/12	17:15:58	1	DEMOL1	29	18.13	9527	1	DEMOR1	1	9.98	9527
3	2017/4/12	17:16:17	1	DEMOL1	29	18.13	9453	1	DEMOR1	2	13.36	9453

64Win7 (C:) ▸ Aurotek ▸ Csv

體檢 ▾ 共用對象 ▾ 新增資料夾

名稱

- 20170412_L_Table.csv
- 20170412_Merged.csv
- 20170412_R_Table.csv

13. Production Traceability

Production data would be automatically recorded and stored in the IPC. Information such as Date, Time, Product Serial Number, Product Name, Production Quantity, Production Cycle time & Operator ID will be kept for future tracking.
(An optional barcode reader is required to enable this function)

Optional Features

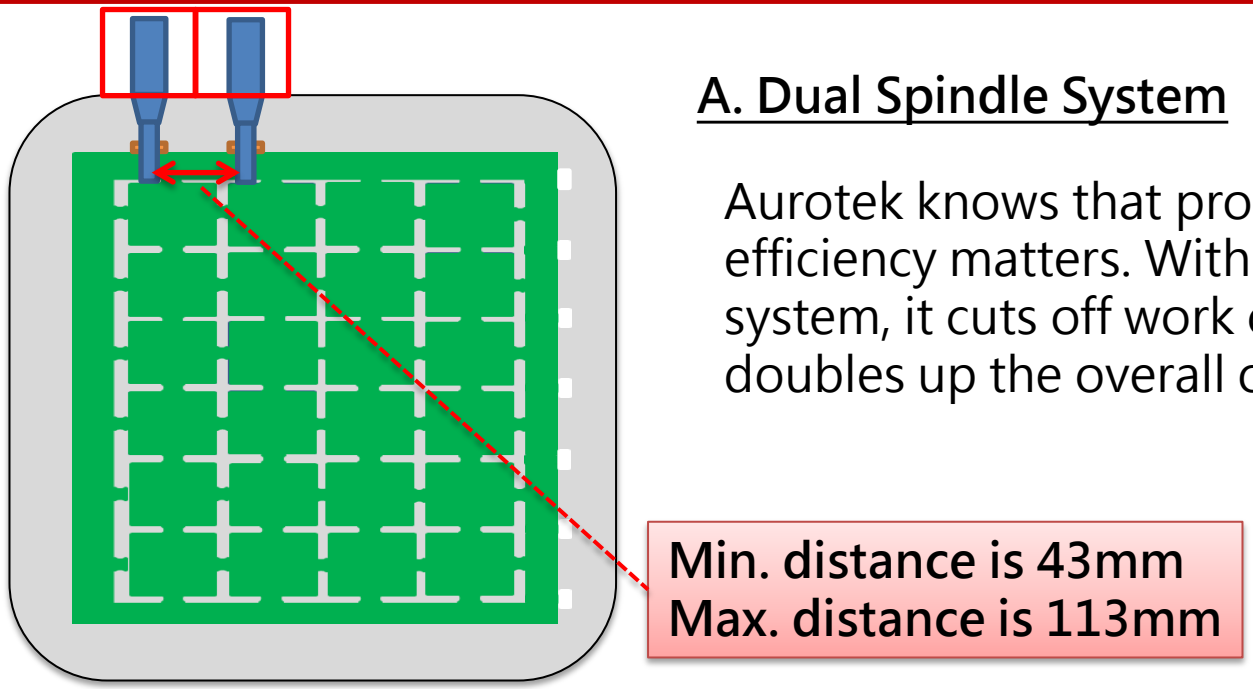

A. Dual Spindle System

Aurotek knows that production efficiency matters. With dual spindle system, it cuts off work cycle time while doubles up the overall output.

Spindles:
SycoTec Spindle 4026 * 2
265W Max.58,000rpm (Torque Max.4.5Ncm)

Optional Features

B. Aluminum Board Cut System

For cutting aluminum PCB panels, Aurotek suggests using higher power, lower rpm, and higher torque spindles.

Spindle for Aluminum Board Cut System:
SycoTec 4025DC-T 470W Max. 30,000rpm (Torque Max.15Ncm)

Routing Bit & Cast Alloys:
The Aluminum Association (AA) has adopted a nomenclature standard to wrought alloys. Please inform Aurotek aluminum alloy codes of MCPCB panel in order to get best cutting performance.

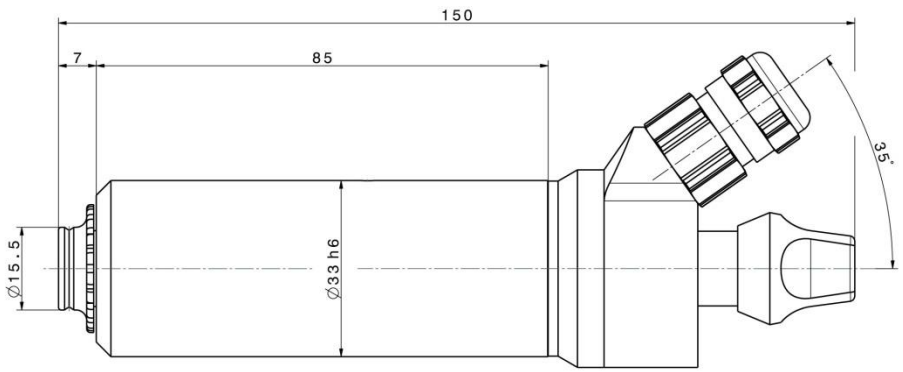

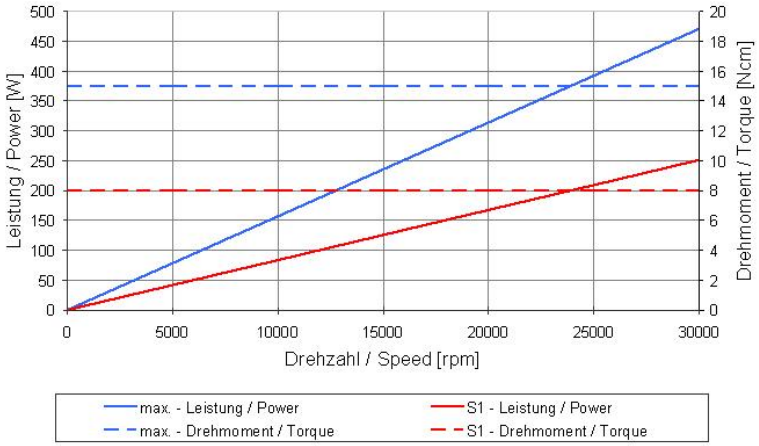

Optional Features

C. Automatic Bit Changer System

When the cutting blade reaches its limit, the system will replace with a new blade and resume production automatically. It dramatically reduces configuration time and maintenance related personnel costs.

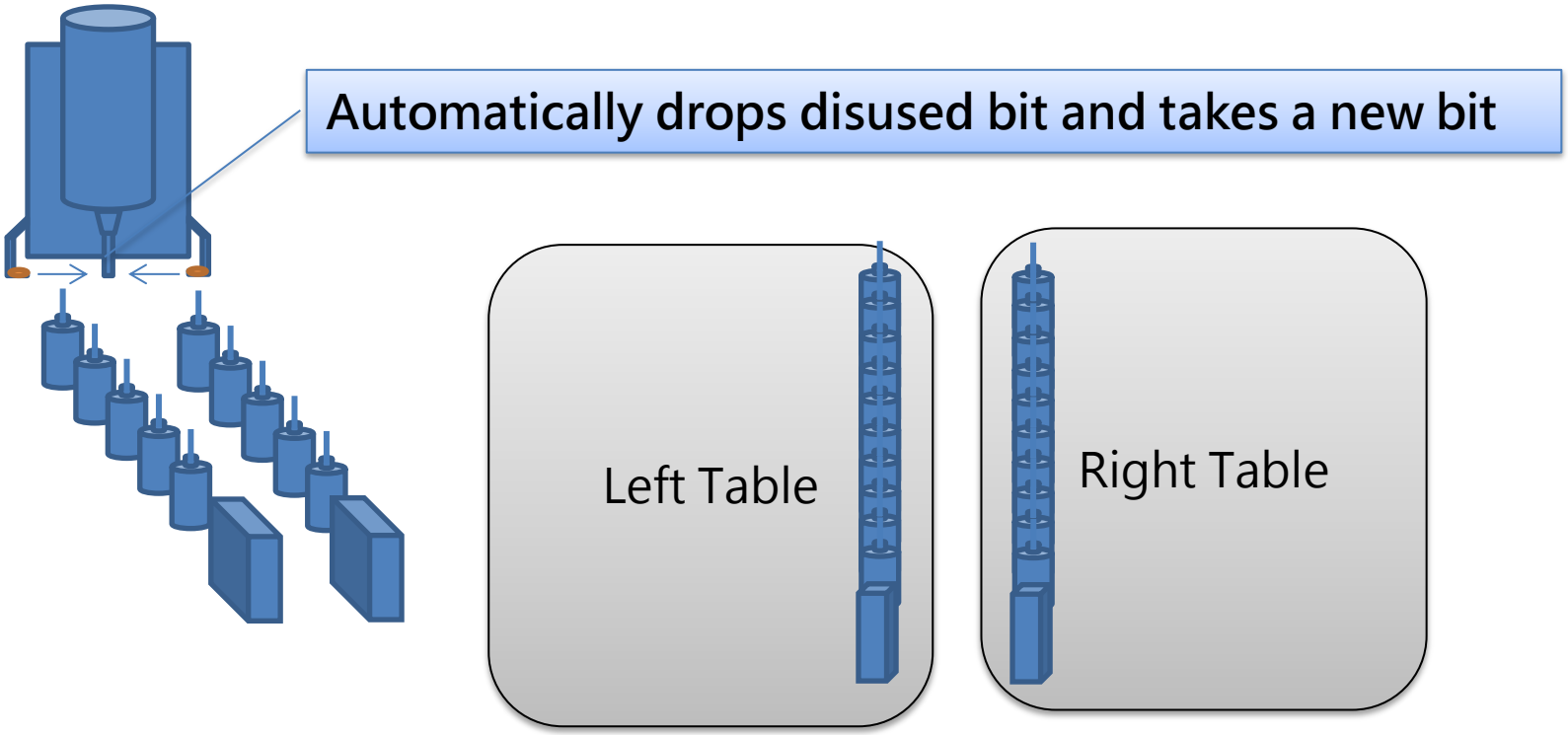

Optional Features

Spindles for Automatic Bit Changer System

To automatically change routing bit, SycoTec 4033 pneumatic spindle is required.

SycoTec 4033 AC Spindle:
500W Max. 100,000rpm (Torque Max.8.4Ncm)

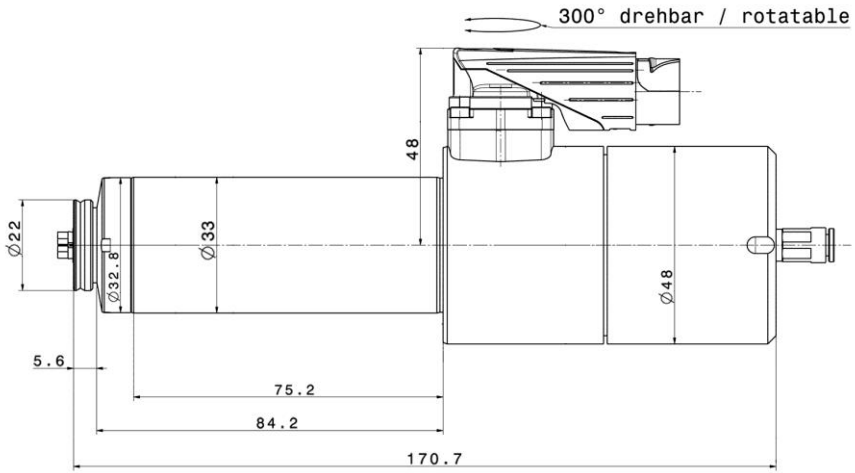

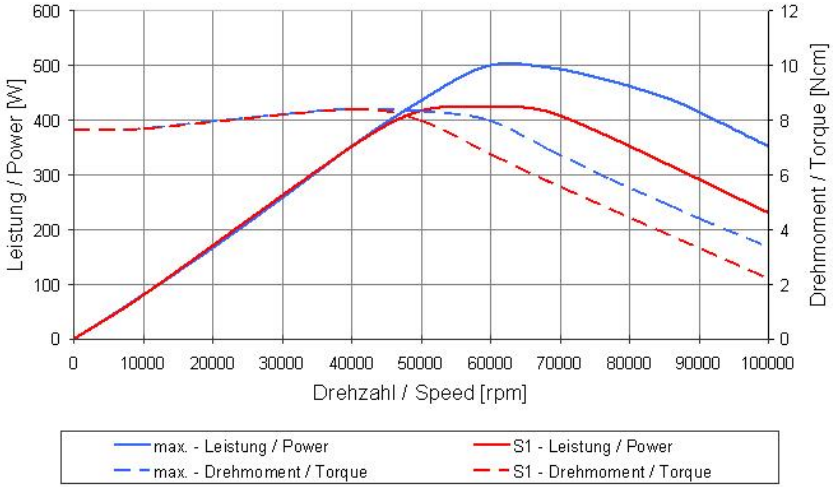

Optional Features

D. Linking Barcode Module & CIM / MES Function

In response to Industry 4.0 era, the new complete data integration function can be easily setup and collect massive real-time production information and upload it to the central terminal server instantly.

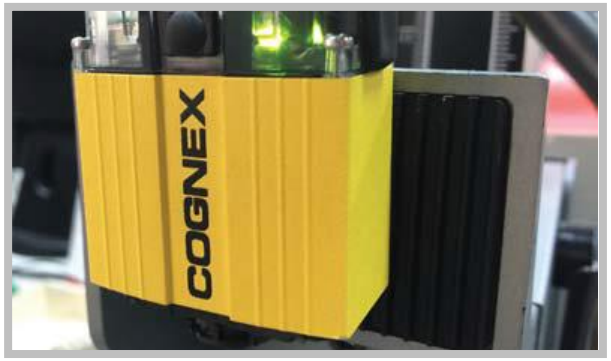

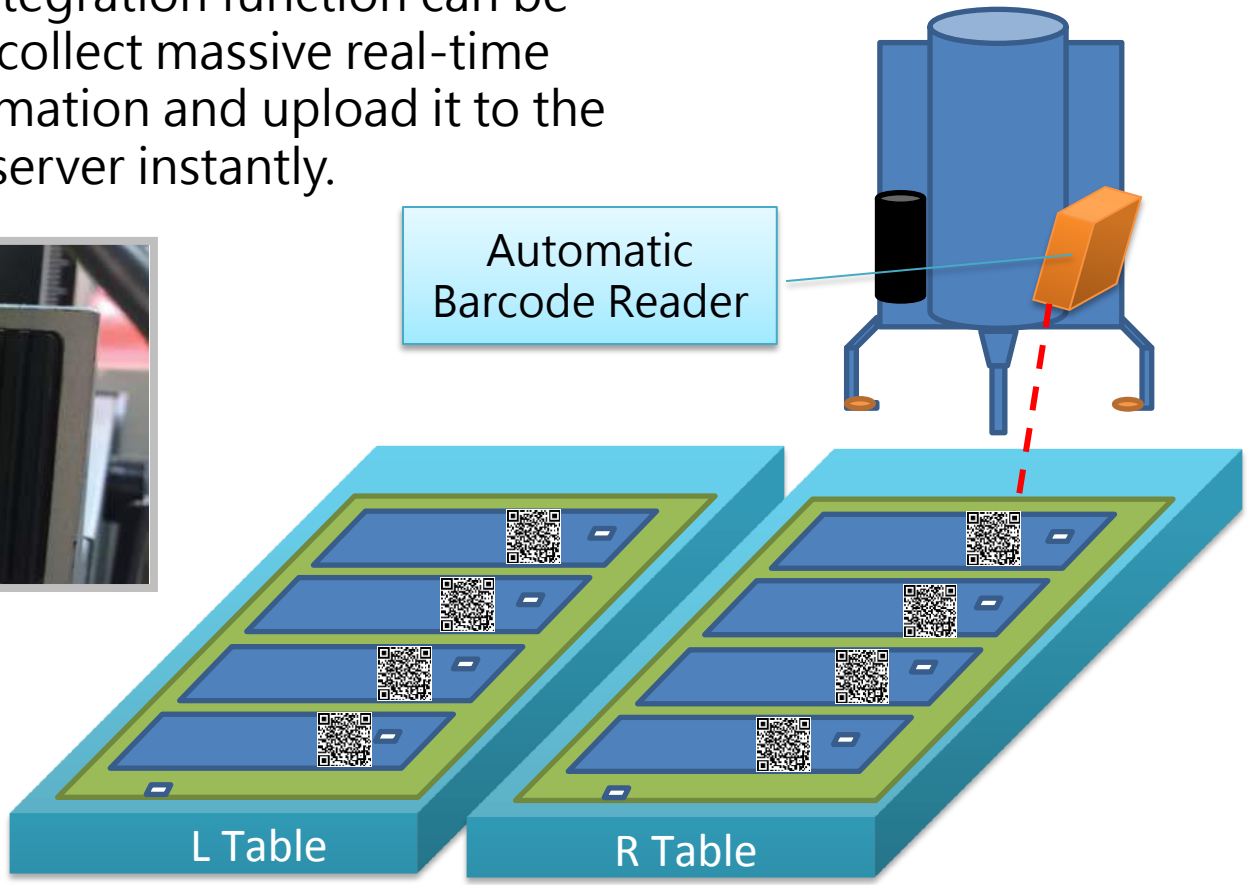

Optional Features

E. Off-line Editing Program

In response to Industry 4.0 era, users only need to upload AUTO CAD DXF to OFF-LINE EDITING PROGRAM, and use mouse to simply create cutting program. Then use USB storage device to save the edited program and upload to machine USB port. It is simple and efficient.

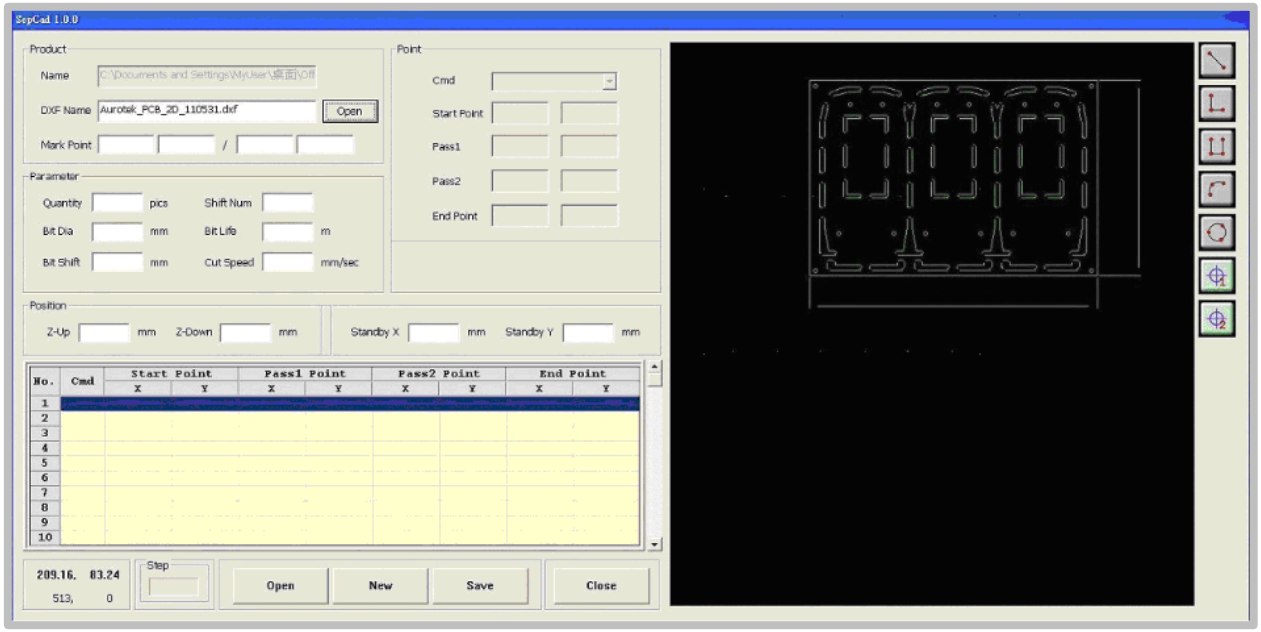

Other Flexible Options

F. Routing Bit Diameter Detection System

G. UPS Support System

H. Spindle Speed Adjustment System

I. USB Backup System

TAIWAN EXCELLENCE

Aurotek is well-experienced to cooperate with our global clients and never let down our client trust. We sincerely welcome you to join us developing your own customized system.

Aurotek

Global Service Support Platform

- Complete machine training program
- Global In-time technical support
- 24 hours professional post-sales service

Global Customers

AUTOMOTIVE LIGHTING
MAGNETI MARELLI
acer
wistron
Panasonic
SONY
FPT POWERTRAIN TECHNOLOGIES
FICOSA
HELLA
Continental
SAMSUNG
JABIL
ASUS Inspiring Innovation • Persistent Perfection
FLEXTRONICS
PEGATRON
FOXCONN
lenovo
TOSHIBA
Visteon
Kingston TECHNOLOGY
Benchmark electronics
HONDA
CASIO
SMART
Valeo
MITSUMI Power in Peripherals®
Calsonic Kansei
英業達 Inventec
Haier
LITEON
BenQ
msi
Digitron
SOLECTRON
FLIR
FPT POWERTRAIN TECHNOLOGIES
VESTEL
BURY TECHNOLOGIES
ERICSSON
NOKIA
Johnson Controls
intel
MOTOROLA
TEIKON
ORION ORION ELECTRIC CO.,LTD
YAZAKI
車載を中心とした表面実装基板アッセンブリーの製造 北一電気株式会社
KOHSHIN
古河電工
日本ソフトウェアエンジニアリング株式会社
ZTE中兴
COMPAL
FDK
NIPRO EUROPE GROUP COMPANIES
HARMAN
pqi
GIGABYTE TECHNOLOGY
varroc EXCELLENCE
SMT 台灣表面黏著科技股份有限公司 Taiwan Surface Mounting Technology Corp.

Aurotek®

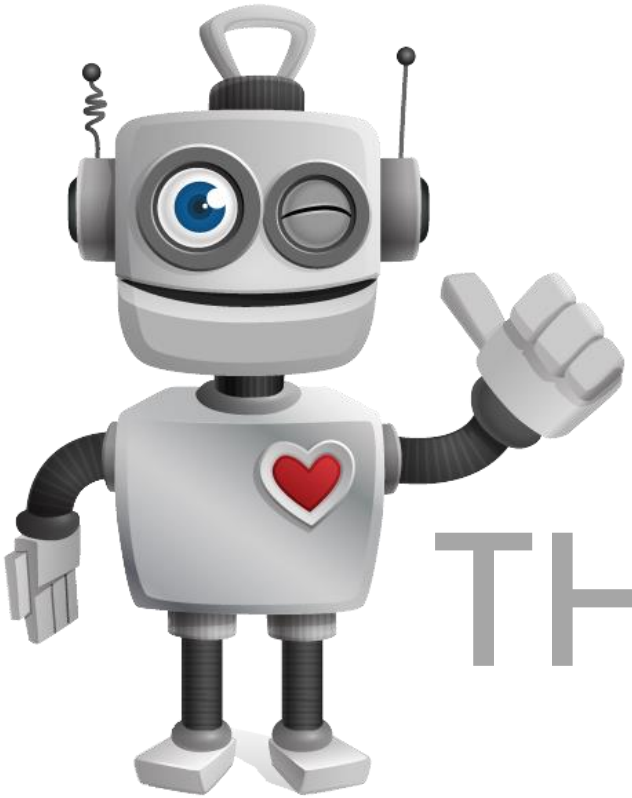

THANK YOU!

Aurotek®
A Complete Solution from One Source

AUROTEK CORPORATION